SECTIONS

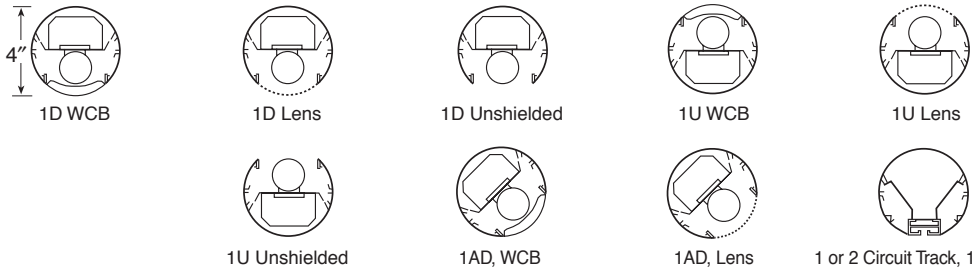

SINGLE MOUNTING (TYPICAL)

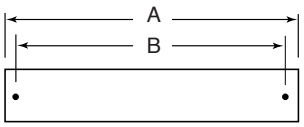

4′, 8′, 12′

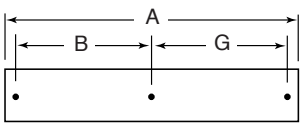

16′, 20′, 24′

ROW MOUNTING

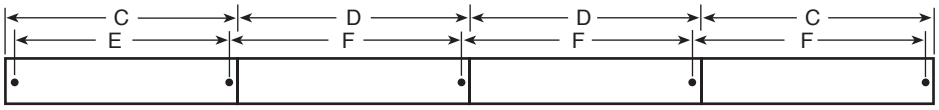

4′, 8′, 12′

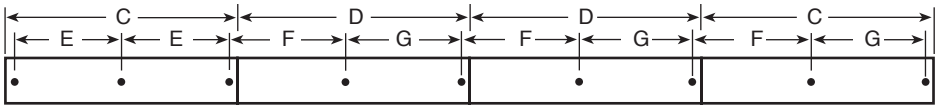

16′, 20′, 24′

FACTORY STANDARD (TYPICAL ROW)

12 ft.	12 ft.	12 ft.	8 ft.

DATA CHART - FOR DIRECT DISTRIBUTION PRODUCTS

Nominal Length	Weight	A	B	C	D	E	F	G
4′	13 lbs.	48½″	36″	48⅜″	48¼″	36″	48¼″	–
8′	22 lbs.	96½″	84″	96⅜″	96¼″	84″	96¼″	–
12′	34 lbs.	144½″	132″	144⅜″	144¼″	132″	144¼″	–
16′	43 lbs.	16′ ½″	90″	16′ ⅜″	16′ ¼″	90″	16′ ¼″	90″
20′	55 lbs.	20′ ½″	114″	20′ ⅜″	20′ ¼″	114″	20′ ¼″	114″
24′	64 lbs.	24′ ½″	138″	24′ ⅜″	24′ ¼″	138″	24′ ¼″	138″

DATA CHART - FOR INDIRECT DISTRIBUTIONS

Nominal Length	Weight	A	B	C	D	E	F	G
4′	13 lbs.	52½″	50″	52⅜″	52¼″	50″	52¼″	–
8′	22 lbs.	100½″	98″	100⅜″	100¼″	98″	100¼″	–
12′	34 lbs.	148½″	146″	148⅜″	148¼″	146″	148¼″	–
16′	43 lbs.	16′ 6½″	98″	16′ 6⅜″	16′ 6¼″	98″	100¼″	98″
20′	55 lbs.	20′ 6½″	146″	20′ 6⅜″	20′ 6¼″	146″	148¼″	98″
24′	64 lbs.	24′ 6½″	146″	24′ 6⅜″	24′ 6¼″	146″	148¼″	146″

Note: Dimensions shown are for standard, non-rotational mounting. For rotatable products contact factory.

FIXTURE CONNECTIONS

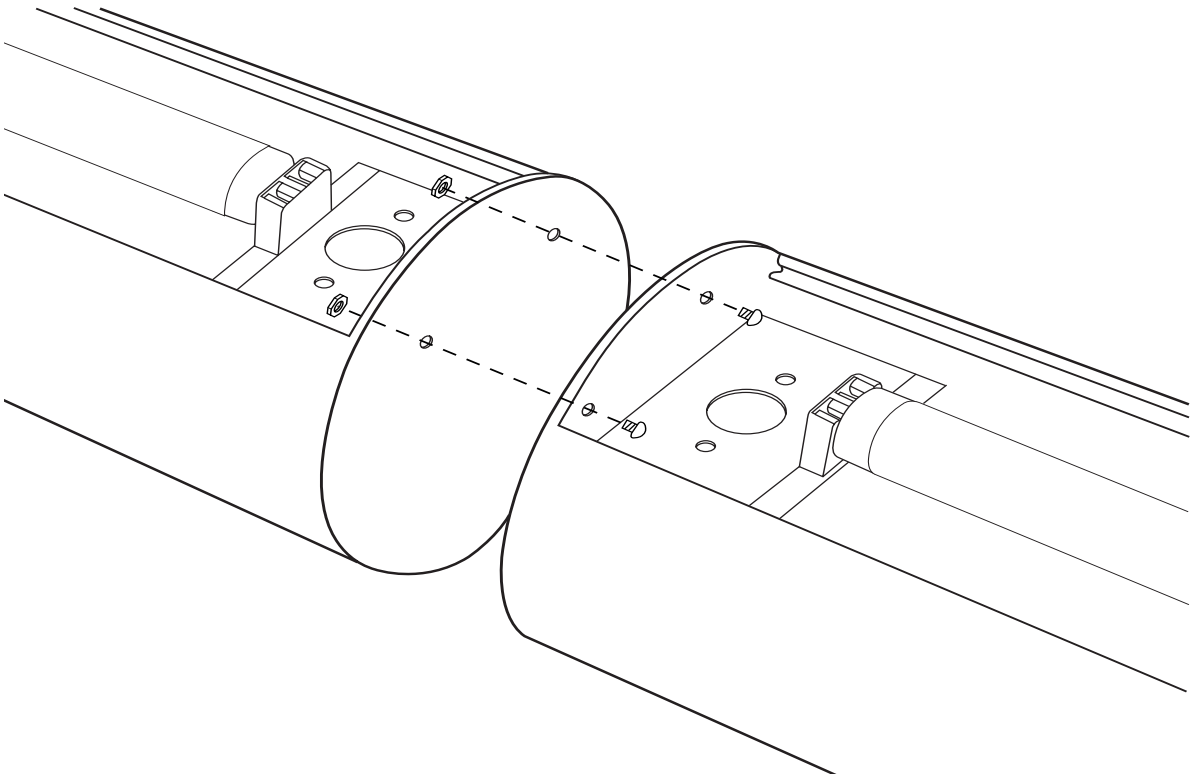

CORNER DIMENSIONS

90°

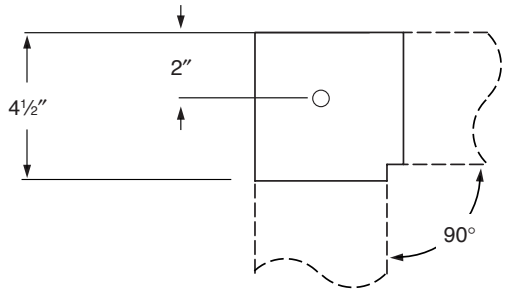

135°

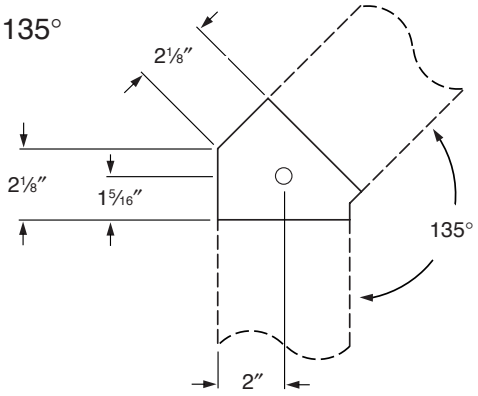

Tee

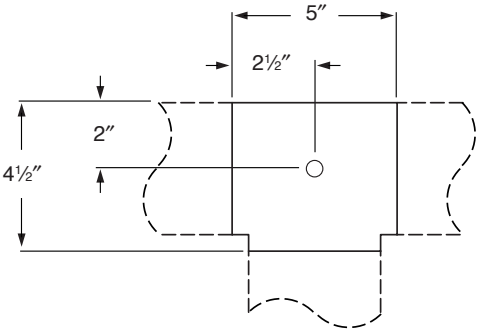

Cross Tee

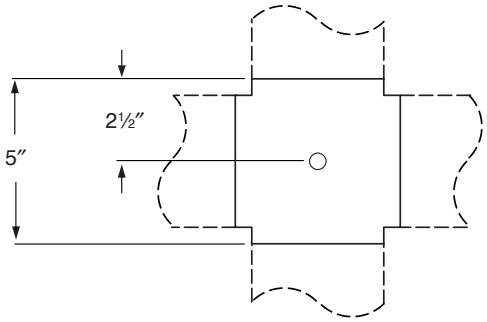

ALERA LIGHTING
701 Millennium Blvd
Greenville SC 29607 • (864) 678-1000
www.aleralighting.com
We are architectural fluorescent lighting

Subject to change without notice.

AL 10/07

HUBBELL® Hubbell Lighting, Inc.